CMQD 6500/7500 GenSet

Diesel
7.5 kW 60 Hz
6.5 kW 60 Hz

Commercial GenSet

- Dramatically Lower Noise, Vibration, Harshness (NVH)
- Up to 15 dB(A) Quieter Than Conventional Diesel Generators
- Load-Matching, Variable Speed Operation
- Enclosed Muffler for Added Quietness, Easy Installation
- Automatic Glow Plug Eliminates Preheat Time Uncertainty
- Self-Diagnostic Capability Simplifies Troubleshooting
- Pure Sine Wave Output for Quality Power
- Convenient, Top-Mounted Switches and Coolant Level Check/Fills
- Complete, Integrated Package for Easy, Low-Cost Installation
- Service and Maintenance Points Accessible Through Easy-Latch Side Service Door

Models and Ratings

Model	Fan	Hz	Watts	Voltage	Amps	PF	Phase	Circuit Breaker
7.5 HDKAT/41934	Internal	60	7500	120	62.5	1.0	1	(1) 2-Pole, 35 A
6.5 HDKAT/6006	Internal	60	6200	100	62.5	1.0	1	(1) 2-Pole, 35 A

-Ratings apply up to 500 ft (153 m) altitude, 85° F (29° C) ambient* with No. 2 diesel fuel.
-Maximum power capability decreases 3.5% for each 1000 ft (305 m) above 500 ft (153 m) and 1% for each 10° F (5.5° C) increase in ambient* temperature above 85° F (29° C).
-Ratings are at intermittent power output. Continuous ratings are 90% of intermittent.

*Ambient is defined as the air temperature measured at the cooling air inlet to the set.

Weight, Size and Sound Level

- 420 lb (190.9 kg), wet
- Length 36.35 in (923.2 mm), Width 24.23 in (615.4), Height 22.28 in (565.9 mm)
- 64 dB(A) at 10 ft (3 m), before installation, no load
- 67 dB(A) at 10 ft (3 m), before installation, 1/2 load
- 71 dB(A) at 10 ft (3 m), before installation, full load

© 1999-2006 Cummins Power Generation

Standard Features

- 3-cylinder diesel engine
- Permanent magnet alternator
- Pure sine wave output
- Digital voltage regulation with no adjustments required
- Bottom air inlet and outlet configuration
- Integral enclosed muffler with stationary exhaust pipe connection point
- USDA approved spark arrestor
- Internal radiator
- Sound insulated cover with cooling air inlet and outlet ducts
- Intake silencer
- Heavy-duty air cleaner
- Maintenance-free electronic governor
- Fused DC circuits
- Automotive type starter
- 10 A battery charging
- Hourmeter
- Waterproof connector for remote operation
- Focalized mounting system with 3-point vibration isolation
- Overvoltage, low oil pressure, overtemp, overspeed, and overload safeties
- Bulkhead type connections for fuel and battery
- Terminal block connection for AC output
- Electric fuel pump
- Fuel filter
- Full flow oil filter
- Service and maintenance from below or side service access panel
- Automatic timed glow plugs for quick easy start
- Instant one touch stop
- Water resistant controls

Accessories

- Remote air cleaner kit (part #541-0531)
- Auxiliary fuel pump kit (part #541-0530)
- Remote control panel, switch only (part #300-4942)
- Remote control panel, switch and hourmeter (part #300-4943)
- Remote control panel, switch and DC voltmeter (part #300-4944)
- Battery, 12 V, 660 cold cranking amps at 0 ^{o} F (-17.8 ^{o} C) (wet) (part #416-0795)
- Battery, 12 V, 620 cold cranking amps at 0° F (017.8^{o} C) (dry) (part #416-0823)
- Remote gauge panel, switch, DC voltmeter, water temperature gauge, oil pressure switch and hourmeter (part #300-5218 Spec A, 300-5027 Spec B and later)
- Remote harness (for use with remote panels), 10 ft (part #338-3490-01), 30 ft (part #338-3490-02)
- Remote control harness pigtail (part #300-4947)
- Remote harness pigtail at panel (part #338-3573)
- Exhaust adapter, 7 in (part #155-2424), 3 in (part #155-2610)
- Exhaust elbow, 90° (part #155-2982)

Basic Dimensions

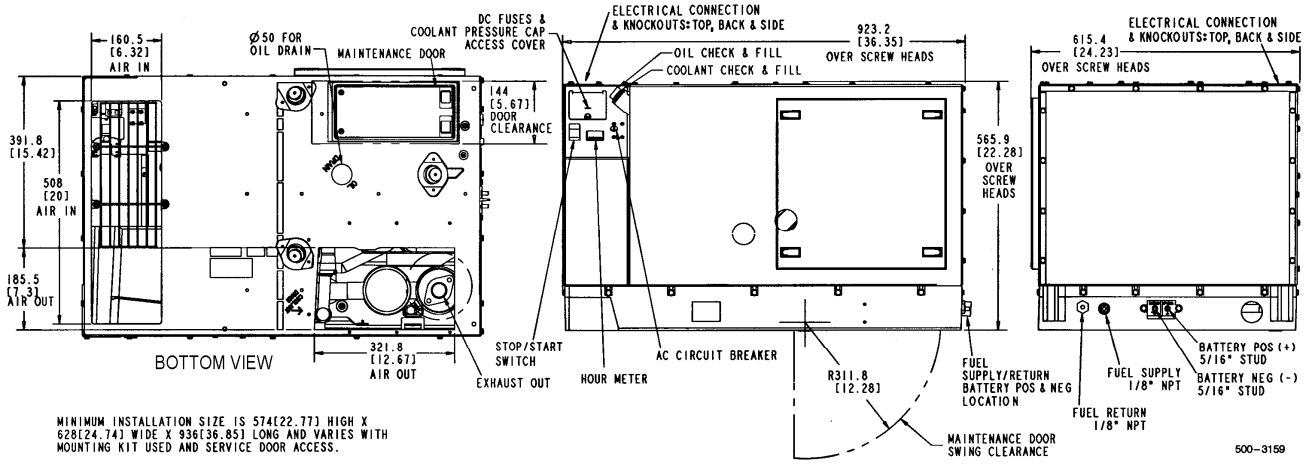

This outline drawing is provided for general reference only is not intend for design or installation. See installation manual and obtain outline drawing number 500-3159 for more information (available from your Distributor/Dealer).

Engine Detail

Model: Kubota 722
Design: 4-cycle, liquid-cooled diesel engine
Cylinders: 3, inline vertical
Bore: 2.64 in (67 mm)
Stroke: 2.68 in (68 mm)
Displacement: 43.88 in^3 (719 cm^3)
Compression ratio: 23:1
Lube oil capacity: 2.8 qt (2.61 L)

Cooling system capacity: 4 qt (4.2 L)
Power (max): at 3600 r/min: 16.6 hp SAE net intermittent
Starting system: Remote, 12 V
Fuel injection pump: Bosch MD type
Combustion chamber: Spherical (T.V.C.S.)

Typical fuel consumption
No. 2 diesel fuel, Gal/hr (L/hr)

	No load	Half load	Full load
6.5/7.5.0 HDKAT	0.21 (0.79)	0.56 (2.12)	.96 (3.63)

Alternator Detail

Design: Onan, permanent magnet
Insulation system: Class H
Exciter system: None

Brushes: None
Bearings: None
Cooling: Main engine fan cooled

GenSet Detail

	No load - full load	Constant load
Voltage regulation:	±1%	±2%
Frequency regulation:	±0%	±0.5%

Control

- Microprocessor control
- Integrated generator and engine control
- User and service personnel accessible diagnostics
- Fused DC circuits
- Overvoltage safety
- Hourmeter
- Water resistant control switches
- Low oil pressure safety
- Overspeed safety
- Overload safety
- Automatic times glow plugs
- One touch stop

Warranty Policy

The ONAN limited warranty covers virtually everything except routine maintenance for the first two years you own your generator set, or the first 2,000 hours of operation, whichever comes first. In addition, it includes a free 90-day adjustment policy, which provides that Onan will make minor adjustments to your new genset during the first three months you own it - free of charge!

For complete Onan limited warranty details see your certified Onan Distributor/Dealer.

After Sale Support

EASY TO LOCATE CERTIFIED ONAN SERVICE AND PARTS DEALERS - Onan has the largest and best-trained worldwide certified Distributor/Dealer network in the industry, offering on-time parts and service, and installation assistance. Cummins Onan Distributor/Dealers stock and sell commonly used Onan GenSet maintenance parts, accessories and products, plus operator manuals and literature on current Onan GenSets. They can help you select and install the right genset or accessories on older models, or provide answers to questions on proper operation and maintenance procedures.

MANUALS - Installation and operators manuals are shipped with the genset. To obtain additional copies or other manuals for this model, see your Cummins Onan Distributor/Dealer and request the following part numbers: Operators Manual (981-0161), Parts Manual (981-0200B), Service Manual (981-0522B), and Installation Manual (981-0623).

Standards and Testing

Tested at extremes of temperature -20° F to 120° F for starting and operation.
Tested with commercial loads.
Tested in high humidity conditions.
Tested in salt spray conditions.
Tested in heavy air borne dust conditions.
Field Test Program.
This product meets U.S. EPA Tier II.
This generator set was designed and manufactured in facilities certified to ISO 9001.
CSA certified for CSA C22.2 std 100 and std 14.

WARNING:

Do not use this genset on a boat. Such use may violate U.S. Coast Guard regulations, and can result in severe personal injury or death from fire, explosion, electrocution, or carbon monoxide poisoning.

Contact your Distributor/Dealer for more information:

Cummins Power Generation
1400 73rd Avenue N.E.
Minneapolis, MN 55432 U.S.A.
phone: 1-800-888-ONAN or 763-574-5000
fax: 763-528-7242
e-mail: feedback@onan.com
WEB: www.onan.com.

Onan is a brand of Cummins Power Generation. Cummins Power Generation is a subsidiary of Cummins Inc. Onan is a registered trademark of Cummins Inc.

WARNING: Backfeed to utility systems can cause electrocution or property damage. Do not connect to building electrical except through approved device and after building main breaker is opened.